CMTDDZ 东莞市田都科技有限公司
Dongguan TianDu Technology Co. Ltd.

TYPE-C 3PIN-短体立式插板DIP

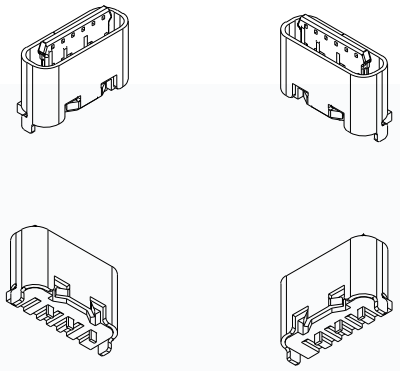

PART SPECIFICATIONS:

1.MATERIAL SPECIFICATION:
- 1.1 HOUSING:HIGH TEMPERATURE RESISTANT PLASTIC,UL94 V-0.
- 1.2 CONTACTS:COPPER ALLOY
- 1.3 SHELL: STAINLESS STEEL

2.PLATING SPECIFICATION:
- 2.1 CONTACTS:
  - Ni 50u" MIN. UNDER PLATED OVER ALL.
  - Au PLATED ON THE FUNCTIONAL AREA OF CONTACT.
  - Sn PLATED ON SOLDER AREA.
- 2.2 FRONT SHELL:
  - Ni 50u" MIN. UNDER PLATED OVER ALL.

3.MECHANICAL PERFORMANCE.
- 3.1 INSERTION FORCE: 0.5kgf~2.0kgf.
- 3.2 REMOVAL FORCE: 0.6kgf~2.0kgf.
- 3.3 DURABILITY: 5000 CYCLES.

4.ELECTRICAL PERFORMANCE
- 4.1 CURRENT RATING: 3.0A
  VOLTAGE RATING: 5.0V
- 4.2 LLCR:
  VBUS & GND PINS AND OTHER PINS: 40mΩ/PIN MAX.
  LLCR MAX. CHANGE OF ALL PINS: 10mΩ.
- 4.3 INSULATION RESISTANCE: 100MΩ MIN
- 4.4 DIELECTRIC WITHSTAND VOLTAGE,AC 100V FOR 1 MINUTE.

5.ENVIRONMENTAL PERFORMANCE:
OPERATING TEMPERATURE: -25°C~+85°C.

6.IR REFLOW:
THE PEAK TEMPERATURE ON THE BOARD SHALL BE MAINTAINED FOR 10 SECONDS AT 260°C.

CMTDDZ ®

尺寸参数 / PRODUCT DIMENSION

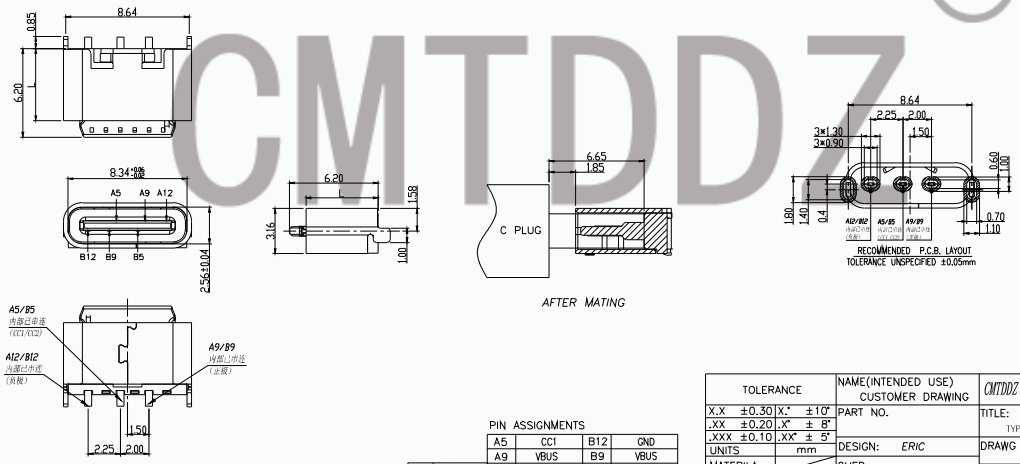

PIN ASSIGNMENTS

	A5	CC1	B12	GND
	A9	VBUS	B9	VBUS
L =5.0	A12	GND	B5	CC2
L =5.5	PIN	SIGNAL NAME	PIN	SIGNAL NAME

TOLERANCE		NAME(INTENDED USE) CUSTOMER DRAWING	CMTDDZ 东莞市田都科技有限公司 Dongguan TianDu Technology Co. Ltd.			
X.X ±0.30	X.° ±10°	PART NO.	TITLE: TYPE-C 3PIN-短体立式插板DIP			
.XX ±0.20	.X° ± 8°					
.XXX ±0.10	.XX° ± 5°	DESIGN: ERIC	DRAWG NO.			
UNITS	mm					
MATERILA		CHED:		SCALE	SHEET	REV.
FINISH		APPD:		1:1	1/2	V0

包装规格 / PACKING SPECIFICATION

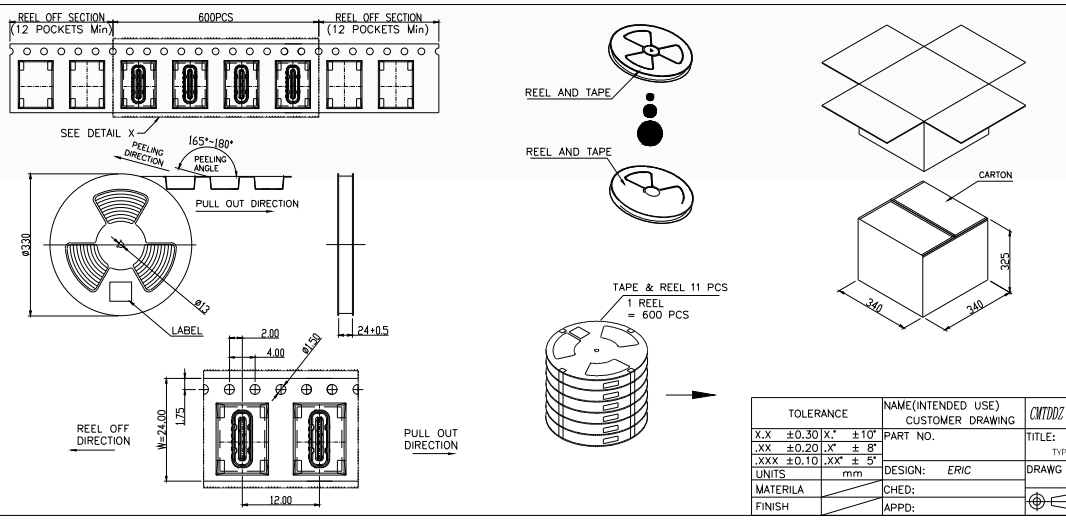

TOLERANCE		NAME(INTENDED USE) CUSTOMER DRAWING	CMTDDZ 东莞市田都科技有限公司 Dongguan TianDu Technology Co. Ltd.			
X.X ±0.30	X.° ±10°	PART NO.	TITLE: TYPE-C 3PIN-短体立式插板DIP			
.XX ±0.20	.X° ± 8°					
.XXX ±0.10	.XX° ± 5°	DESIGN: ERIC	DRAWG NO.			
UNITS	mm					
MATERILA		CHED:		SCALE	SHEET	REV.
FINISH		APPD:		1:1	2/2	V0